DASSAULT SYSTEMES

CATIA

3DEXPERIENCE

# CATIA SYSTEMS ENGINEERING VESYMA ENGINES LIBRARY

Model spark ignition and compression ignition engines for intake and exhaust flows, emissions and torque assessment

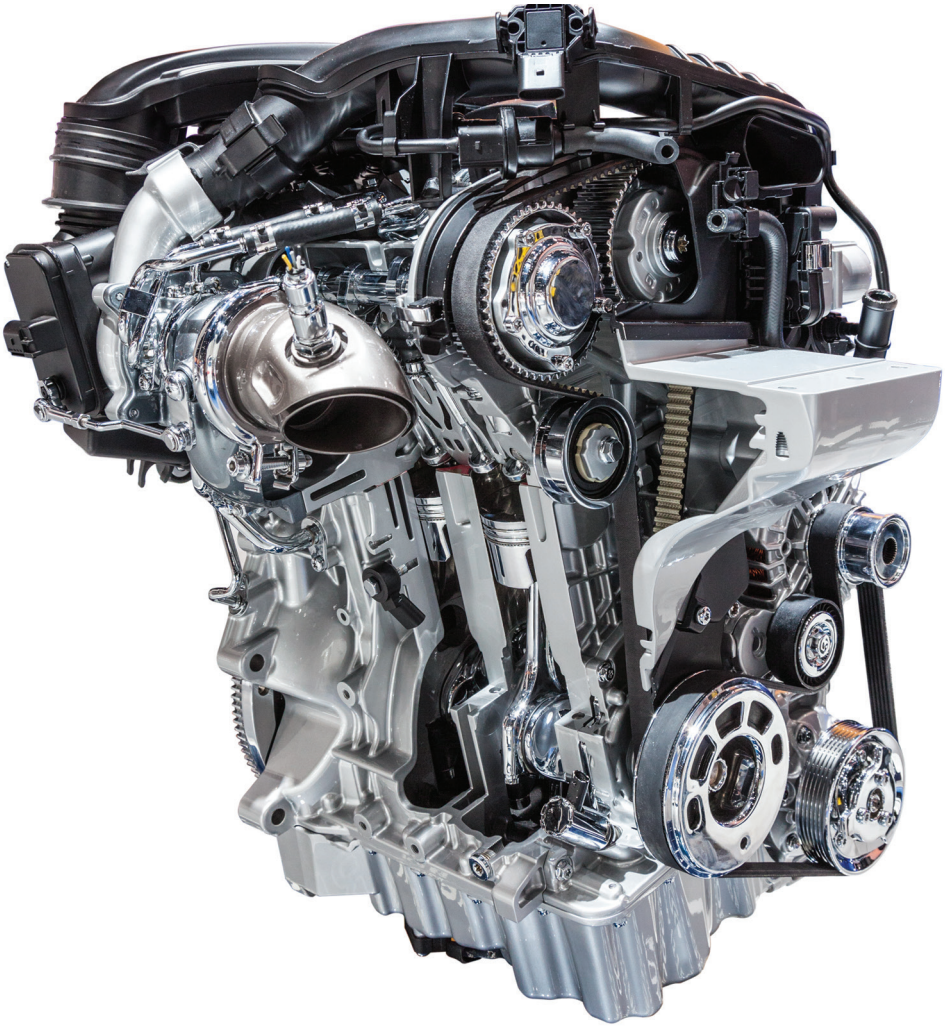

## MODELING AND SIMULATION FOR ENGINES TO INCREASE EFFICIENCY

The Modelica-based engines library is capable of modelling both spark ignition and compression ignition engines and supports different levels of fidelity. The engines library has been designed to work with common engine architecture templates. This enables quick model set-up and ensures a consistent layout for a variety of engine architectures. The mean value models predict the cycle averaged intake and exhaust flows, emissions and torque. The crank angle resolved models predict the complete cyclic intake and exhaust flows and torque.

## ENGINES LIBRARY

The engines library provides a common model architecture for both the mean value and crank angle resolved models. The library uses the Modelica media library for the fluid property models and includes a range of fluid components to provide pipes, valves, turbocharger, supercharger, catalytic converter and many more models. Additional medium models have been developed to track the intake gases and exhaust emissions.

The mechanics are modelled in detail using the Rotational3D approach which enables the friction in every bearing and within the valve train to be accounted for and compliance in the crankshaft to be included.

Typical applications of the engines library are for investigating/modelling:

- Control algorithm development
- Transient response of the complete system
- Mount forces
- Excitation of driveline with full cyclic torque
- Cranking (start-up) and engine warm up
- Detailed friction modelling
- Downsizing

## WHAT'S NEW?

Rearrangement of experiments, categorized into applications which demonstrate a number of different use cases:

- Engine cooling
- Variable cam timing
- Turbocharging
- Atkinson cycle operation
- Multiple injections
- Detailed air-flow models with pressure pulsations
- Improvement of turbocharger model tests
- Additional intercooler models with the addition of a fan cooled unit and increased detail versions

## BENEFITS

- Easy to customize to investigate new technologies like variable camshaft timing and Atkinson cycle engines
- Add turbochargers, superchargers and related components such as intercoolers
- Easy to switch from mean value and crank angle models through common templates

## HIGHLIGHTS

- Support modelling engines as mean value models for fast simulation and crank angle resolved models for detailed analysis
- A single model including intake and exhaust flow and mechanical dynamics
- Spark ignition and compression ignition engines
- Supports naturally aspirated and forced induction (turbochargers and superchargers)
- Uses standard Modelica connectors to ensure compatibility with other automotive model libraries
- Uses the Rotational3D library developed by Claytex for efficient simulation of rotating multibody systems

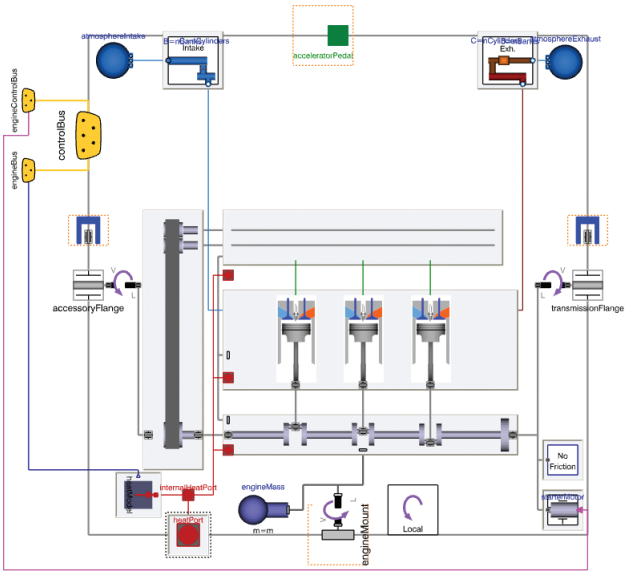


## Our 3DEXPERIENCE® platform powers our brand applications, serving 12 industries, and provides a rich portfolio of industry solution experiences.

Dassault Systèmes, the **3DEXPERIENCE®** Company, provides business and people with virtual universes to imagine sustainable innovations. Its world-leading solutions transform the way products are designed, produced, and supported. Dassault Systèmes' collaborative solutions foster social innovation, expanding possibilities for the virtual world to improve the real world. The group brings value to over 210,000 customers of all sizes in all industries in more than 140 countries. For more information, visit **www.3ds.com**.

3DEXPERIENCE®

©2017 Dassault Systèmes. All rights reserved. **3DEXPERIENCE®**, the Compass icon, the 3DS logo, CATIA, SOLIDWORKS, ENOVIA, DELMIA, SIMULIA, GEOVIA, EXALEAD, 3D VIA, 3DSWYM, BIOVIA, NETVIBES, IFWE and 3DEXCITE are commercial trademarks or registered trademarks of Dassault Systèmes, a French "société européenne" (Versailles Commercial Register # B 322 306 440), or its subsidiaries in the United States and/or other countries. All other trademarks are owned by their respective owners. Use of any Dassault Systèmes or its subsidiaries trademarks is subject to their express written approval.

DOFware
Distribuito in Italia da DOFware S.r.l.
Corso Lombardia, 75 – 10099 San Mauro T.se (TO)
www.dofware.com info@dofware.com Tel.: +39 011 223 76 58

DASSAULT SYSTEMES | The 3DEXPERIENCE® Company

**Americas**
Dassault Systèmes
175 Wyman Street
Waltham, Massachusetts
02451-1223
USA

**Europe/Middle East/Africa**
Dassault Systèmes
10, rue Marcel Dassault
CS 40501
78946 Vélizy-Villacoublay Cedex
France

**Asia-Pacific**
Dassault Systèmes K.K.
ThinkPark Tower
2-1-1 Osaki, Shinagawa-ku,
Tokyo 141-6020
Japan