DASSAULT SYSTEMES

CATIA

3DEXPERIENCE

CATIA SYSTEMS ENGINEERING

ELECTRIFIED POWERTRAINS LIBRARY

Model & optimize electric drive systems

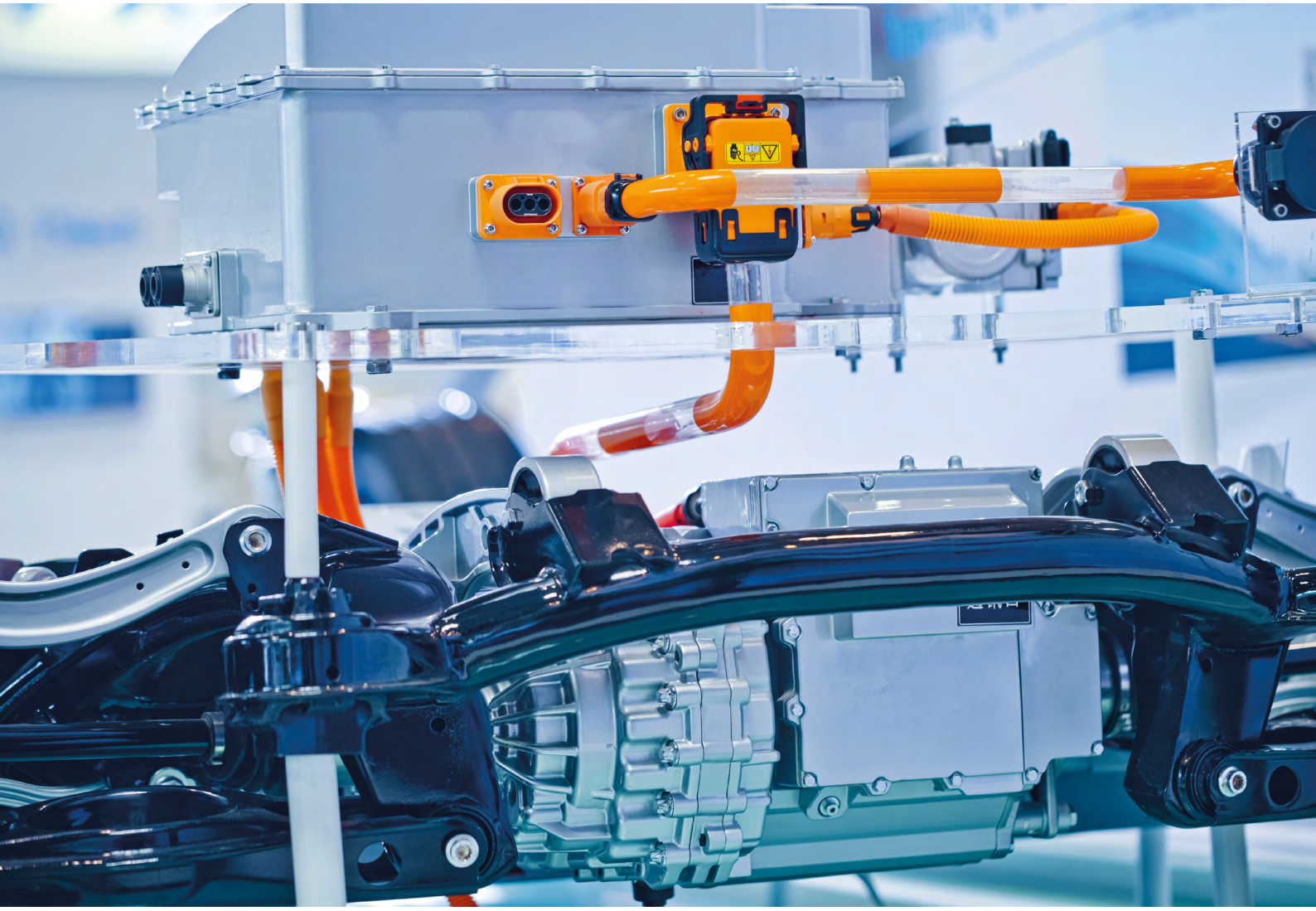

ACCELERATE YOUR SYSTEM DESIGN TO BUILD YOUR NEXT GENERATION OF ELECTRIC DRIVES

The Electrified Powertrains Library assists the entire process of designing electrified powertrains. It covers the key components of an electric drive system with varying levels of complexity, i.e. physical, switched, averaged or energy-based.

Model variety covers electric machines with associated controllers, e.g. field-oriented control and inverters with corresponding modulation methods, e.g. space-vector modulation.

Further components, e.g. longitudinal dynamics, control unit, driver and energy supply are provided to simulate the entire electric powertrain of battery- or hybrid electric vehicle (BEV/HEV) topologies

LIBRARY CONTENT

Power electronics

The power electronics package contains components of electronic devices required in the context of electric drive modeling, e.g. inverters, converters and rectifiers. The underlying semiconductors of these components are based on either ideal switches of e.g. MOSFETs and IGBTs or lossy switches to calculate the overall losses. Thermal networks can be connected to lossy models to predict the temperature as a function of the calculated losses.

Electric machines

The package provides control for physical models of asynchronous induction- and permanent-magnet synchronous machines. The machine models extend the MSL electric machine models and add necessary in- and outputs for controlling the machine.

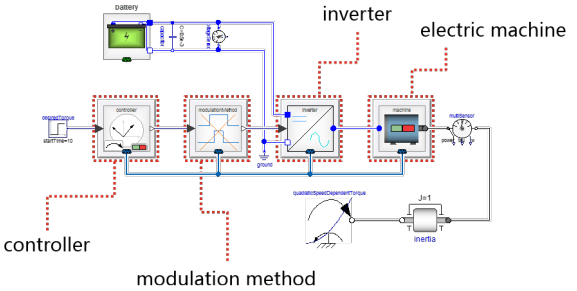

Field-oriented speed- and torque controllers with field-weakening are integrated in the library.

Furthermore, thermal machine models can be used to estimate the temperature.

Electric drives

Provides models of electric drives in different levels of detail. For instance the user can configure a table-based electric drive for e.g. efficiency analysis or a more detailed model based on averaged or switched inverter models and physical models of the electric machine to e.g. investigate for current ripples.

Key features

- Speed/torque controller design of electrified powertrains
- Analysis of different powertrain configurations
- Controller development and design
- Loss estimation of inverters and electric machines for thermal simulations
- Voltage and current ripple effect studies
- Integrated vehicle models enabling energy consumption simulations for electric vehicles
- Generating parameters for table-based models from physical models

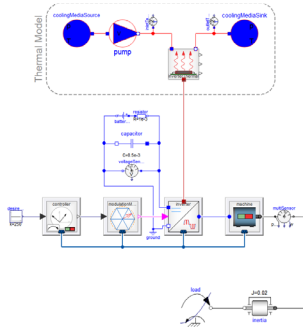

Moreover, internal library functions allow generating characteristic maps from physical models of electric drives for high-performance system simulation.

Supply system

Extends the library with basic energy storage models, i.e. batteries and range extenders.

System wide frequency analysis is enabled by wiring harness models considering damping and resonance effects along with EMI filters.

Vehicle

The provided vehicle package allows setting up example use cases for electric drives in different characteristics, providing an expandable and configurable infrastructure as well as all required components from environment to operational control models.

USE CASES ACROSS THE INDUSTRIES

- Early stage system design based on comparably simple models, e.g. constant efficiency
- Energy consumption or power cycle efficiency, e.g. energy-based models in driving cycles
- Overload capability estimation based on thermal models
- Investigation on system properties based on detailed physical models e.g. DC-link capacitor sizing

Registration: http://www.3ds.com/how-to-buy/contact-sales/

BENEFITS:

- FLEXIBILITY: Industry-oriented simulation procedures with multiple levels of detail
- EFFICIENCY: Reduce the time spent on the test bench by using simulations with the EPTL to design electric drives
- CONSISTENCY: One model base with one streamlined data handling process for various applications
- COMPETENCE: Service available from experienced engineers

Our 3DEXPERIENCE® platform powers our brand applications, serving 12 industries, and provides a rich portfolio of industry solution experiences.

Dassault Systèmes, the **3DEXPERIENCE®** Company, provides business and people with virtual universes to imagine sustainable innovations. Its world-leading solutions transform the way products are designed, produced, and supported. Dassault Systèmes' collaborative solutions foster social innovation, expanding possibilities for the virtual world to improve the real world. The group brings value to over 210,000 customers of all sizes in all industries in more than 140 countries. For more information, visit **www.3ds.com**.

3DEXPERIENCE®

©2016 Dassault Systèmes. All rights reserved. **3DEXPERIENCE®**, the Compass icon, the 3DS logo, CATIA, SOLIDWORKS, ENOVIA, DELMIA, SIMULIA, GEOVIA, EXALEAD, 3D VIA, 3DSWYM, BIOVIA, NETVIBES, IFWE and 3DEXCITE are commercial trademarks or registered trademarks of Dassault Systèmes, a French "société européenne" (Versailles Commercial Register # B 322 306 440), or its subsidiaries in the United States and/or other countries. All other trademarks are owned by their respective owners. Use of any Dassault Systèmes or its subsidiaries trademarks is subject to their express written approval.

DOFware
Distribuito in Italia da DOFware S.r.l.
Corso Lombardia, 75 – 10099 San Mauro T.se (TO)
www.dofware.com info@dofware.com Tel.: +39 011 223 76 58

DASSAULT SYSTEMES | The 3DEXPERIENCE® Company

Americas
Dassault Systèmes
175 Wyman Street
Waltham, Massachusetts
02451-1223
USA

Europe/Middle East/Africa
Dassault Systèmes
10, rue Marcel Dassault
CS 40501
78946 Vélizy-Villacoublay Cedex
France

Asia-Pacific
Dassault Systèmes K.K.
ThinkPark Tower
2-1-1 Osaki, Shinagawa-ku,
Tokyo 141-6020
Japan